LACELA

Product: Electric Drill Art. No. 231030

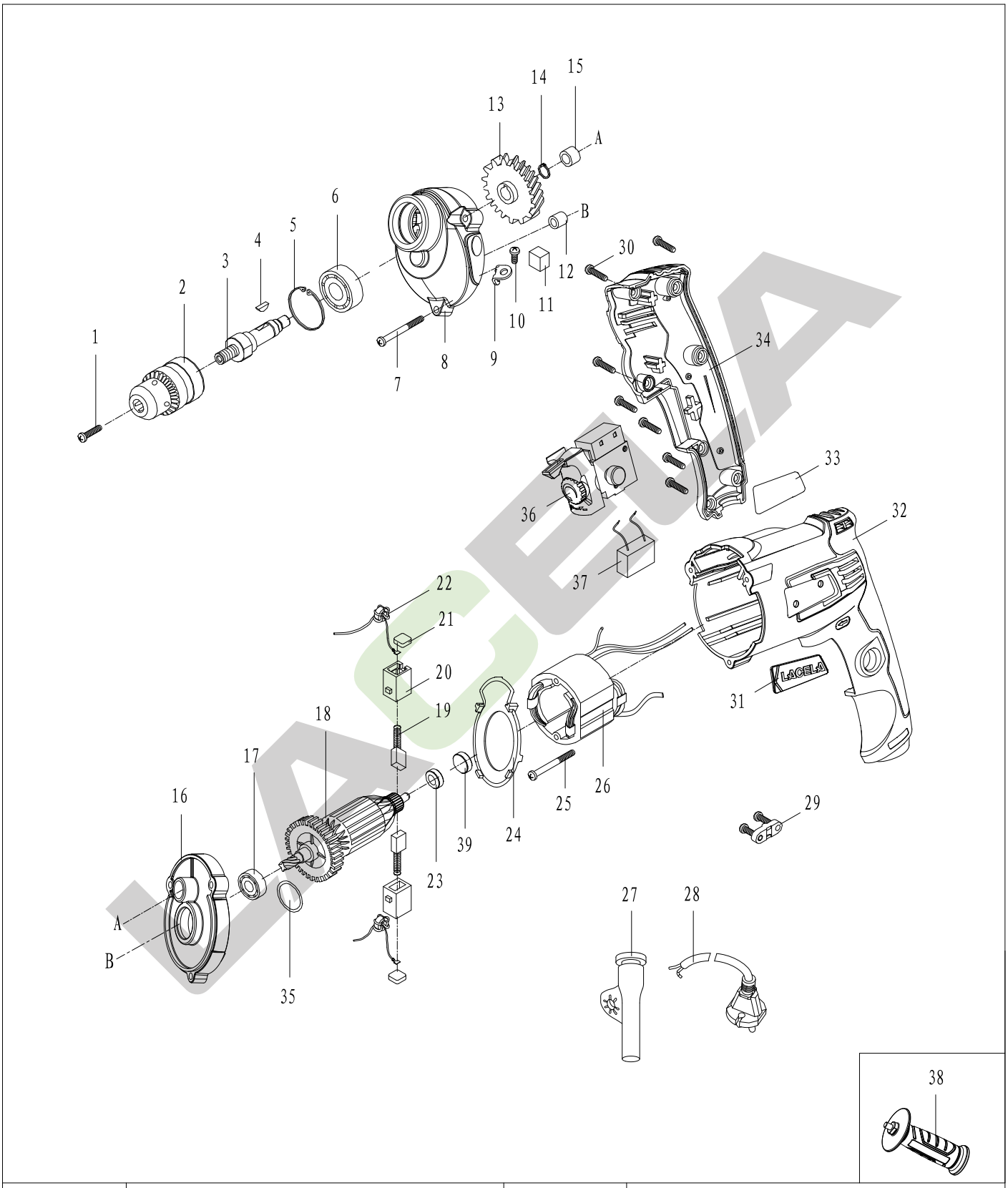

Version No.	D	Enable Time	2022.9

LACELA

Product:Electric Drill Art.No.231030

No.	Part Name(Chinese)	Part Name(English)	Code	Qty	No.	Part Name(Chinese)	Part Name(English)	Code	Qty
1	螺钉M5×20-LH	Screw M5×20-LH	30201073	1					
2	钻夹头	Chuck	10304001033	1					
3	输出轴	Output Spindle	10301001045	1					
4	半圆键3×3.7×10	Woodruff Key 3×3.7×10	30601004	1					
5	孔用弹性挡圈28	Circlip for Hole 28	30302007	1					
6	轴承6001	Bearing 6001	30103013	1					
7	自攻螺钉ST4×35	Screw ST4×35	30202039	3					
8	头壳	Gear Box	10201004078	1					
9	储油块卡板	Oil storage card plate	10401004008	1					
10	自攻锁紧螺钉M4×6	Screw M4×6	30201043	1					
11	储油块	Oil storage block	21201007010	1					
12	含油轴承4.8×9×4.5	Oil bearing 4.8×9×4.5	30102014	1					
13	大齿轮	Gear	10302004052	1					
14	轴用弹性挡圈12	Circlip for Shaft 12	30301023	1					
15	含油轴承8×12×8	Oil bearing 8×12×8	30102022	1					
16	中间盖	Middle cover	10204004058	1					
17	轴承609	Bearing 609	30103207	1					
18	转子	Armature	10502001087	1					
19	碳刷	Carbon Brush	10605001170	2					
20	刷盒	Brush box	10606001051	2					
21	刷盖	Brush cap	10606001050	2					
22	电感	Lnductance	10604001014	2					
23	轴承607	Bearing 607	30103037	1					
24	挡风圈	Windshield	10101005033	1					
25	自攻螺钉ST4×50	Screw ST4×50	30202044	2					
26	定子	Stator	10501001069	1					
27	电缆护套	Cable sheath	10102001024	1					
28	电源线2×0.75	Cord	10602006007	1					
29	电缆压板	Cord Anchor	10101011123	1					
30	自攻螺钉ST4×14	Screw ST4×14	30202019	5					
31	塑料商标	Trademark	20401007012	1					
32	机壳	Housing	10101001106	1					
33	铭牌	Nameplate	20302007121	1					
34	手柄盖	Handle Cover	10101004141	1					
35	O型圈23.5×2.5	O Ring	10102003032	1					
36	开关	Switch	10601001080	1					
37	电容	Capacitance	10603001015	1					
38	侧手柄 M10	Side Handle M10	21201001035	1					
39	轴承衬套	Bearing bush	10102002007	1					
Version No.		D			Enable Time		2022.9		

LACELA